SMD QUARTZ CRYSTAL RESONATOR

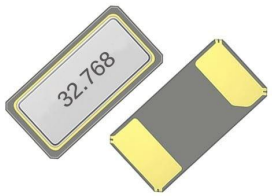

2 Pad Version 2.0×1.2 mm

- Ultra miniature SMD tuning fork crystal resonator
- 32.768 KHz standard
- ±20 ppm Standard
- Excellent Reliability Performance
- Reflow soldering temperature: 260℃ max

RoHS 2002/95/

RoHS compliant

★ PARAMETERS

PARAMETERS	SPECIFICATION
Frequency Range	32.768KHz
Loading Capacitance	12.5pF Std. 6pF、7pF、9pF available
Drive Level	0.2μW (1.0μW Max)
Frequency Tolerance	±10ppm / ±20ppm（at 25℃）
Equivalent Resistance	80KΩ Max (70KΩ available)
Turn-over temperature	+25℃±5℃
Temperature coefficient	-0.04×10^{-6} /℃^{2} max
Operating Temp. Range:	-40～+85℃ (-40～+125℃ available)
Storage Temp. Range:	-40～+85℃
Aging（25℃，First Year）	±3ppm Max

⊙ *All specification subject change without notice.*

★ DIMENSIONS& LAND PATTERN LAYOUT (Unit: mm)

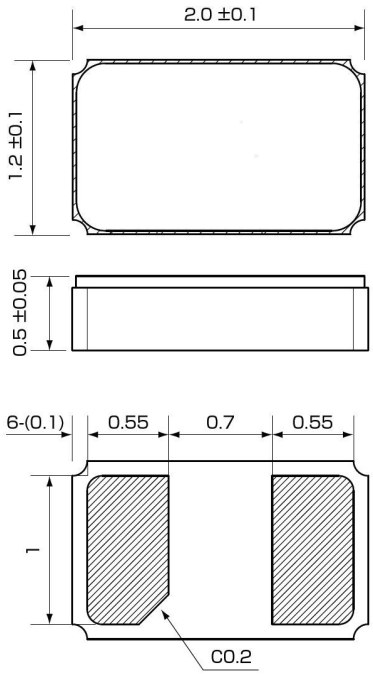

〈Top View〉

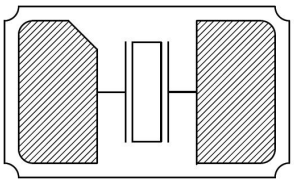

■ **Recommended Land Pattern [mm]**

〈Top View〉

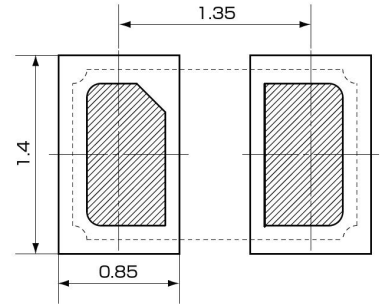

★ PART NUMBER GUIDE *e.g. FTX32.768K12.5SM2-20D (*SM2=2.0×1.2 SMD)*

	Quartz Crystal Resonator	Frequency Hz	Load Capacitance pF	Package	Frequency Tolerance ppm	Operating Temp. Range
FT	X	32.768KHz	12.5	SM2	20	D

Address: Rm 206, Tower B, Taojindi Building, Tenglong Road, Longhua New District, Shenzhen, China Tel: (86)755-83458798 Fax: (86)755-83459818 E-mial: sales@chinachipsuncom

Definition	Description	
Operating Temperature Range	A: -10~+60℃	B: -20~+70℃
	C: -30~+80℃	D: -40~+85℃
	E: -30~+105℃	F: -40~+105℃
	G: -40~+125℃	S: Customer specified

★ TAPING SPECIFICATION (Unit: mm)

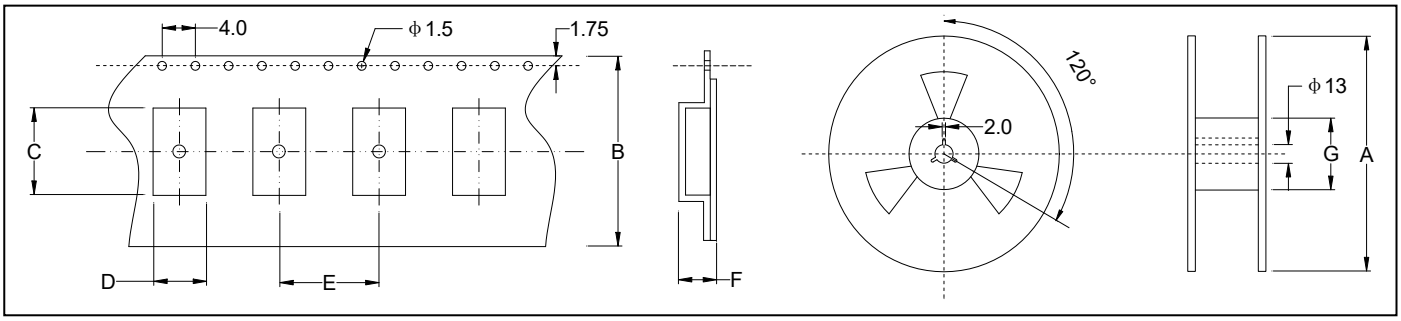

	A	B	C	D	E	F	G
SMD2.0×1.2	180	8.0	2.3	1.45	4.0	0.65	60
3000 pcs per reel							

★ REFLOW SOLDERING PROFILE

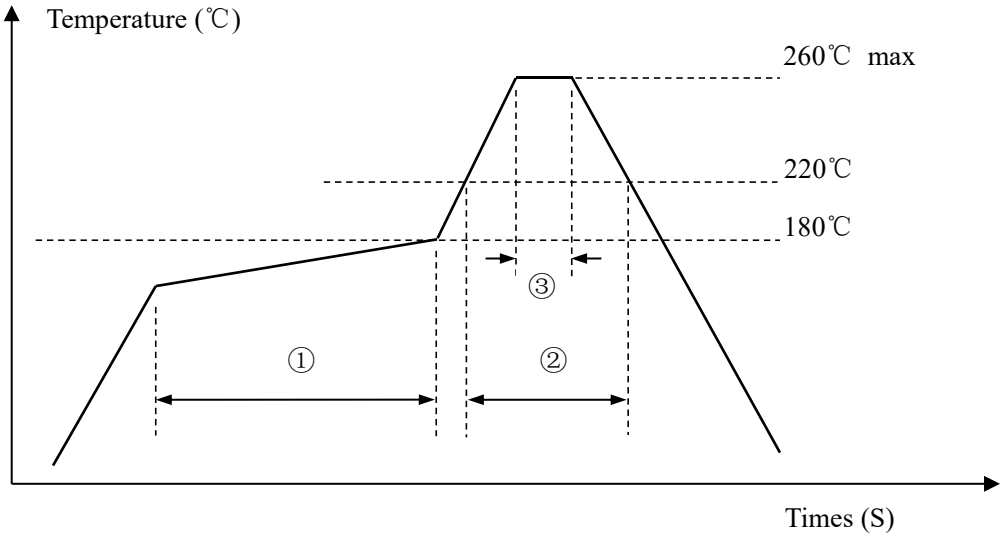

Pb free reflow A	①	Preheat	160~180℃	100sec. max
	②	Primary heat	220℃	35sec. max
	③	Peak	260℃	10sec. max